HOW TO DETERMINE WHAT "SAE" FLYWHEEL HOUSING YOU HAVE

1) COUNT THE NUMBER OF DRILLED AND TAPPED HOLES ON YOUR HOUSING.

2) MEASURE THE DISTANCE FROM THE CENTER OF ONE DRILLED AND TAPPED HOLE TO ANOTHER (MEASURING ACROSS THE CENTER LINE OF THE CRANK SHAFT) [DIMENSION "C"].

3) MEASURE THE PILOT DIAMETER (INSIDE MACHINED DIAMETER) IN THE HOUSING WHERE THE HAYES PUMP MOUNTING PLATE WILL BE MOUNTED [DIMENSION "A"]

USE THE CHART AND FIGURE BELOW TO GUIDE YOU IN DETERMINING WHAT "SAE" FLYWHEEL HOUSING YOU HAVE.

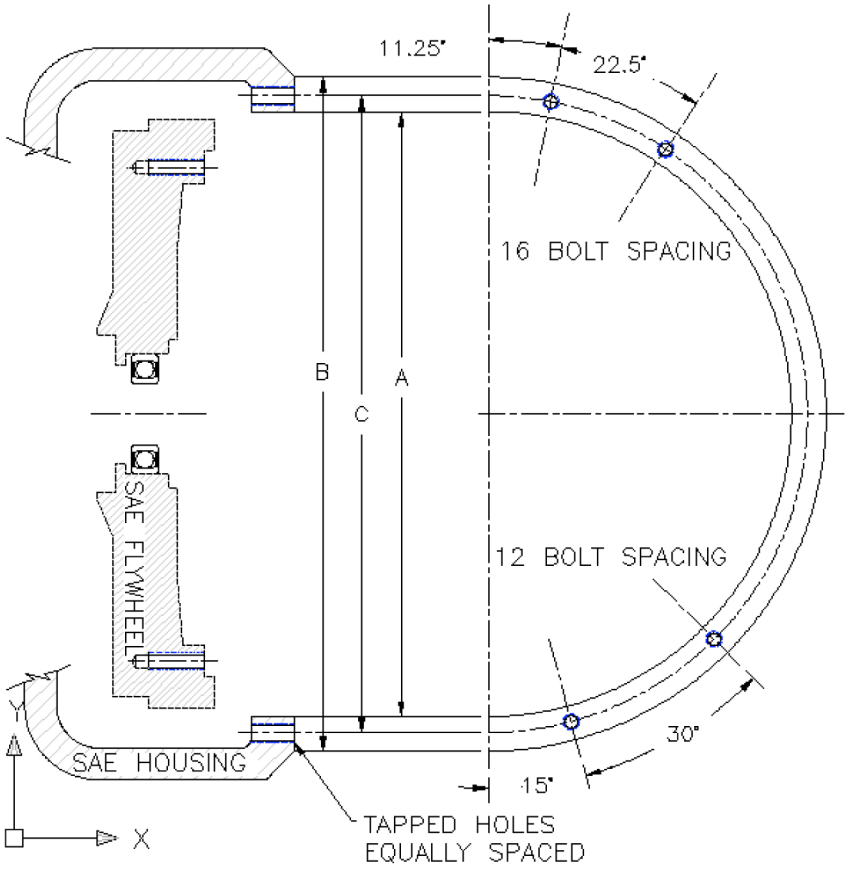

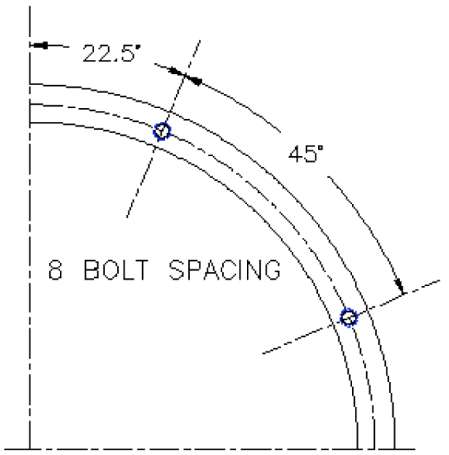

Engine Flywheel Housings - SAE J617

SAE No.	A	B	C	Tapped Holes	
				No	Size
1	20.125	21.75	20.875	12	7/16-14
2	17.625	19.25	18.375	12	3/8-16
3	16.125	17.75	16.875	12	3/8-16
4	14.250	15.88	15.000	12	3/8-16
5	12.375	14.00	13.125	8	3/8-16
6	10.500	12.12	11.250	8	3/8-16

ATTENTION:
IF YOUR HOUSING DOES NOT MATCH UP WITH ANY OF THE SUPPLIED INFORMATION PLEASE CALL BELL FOR HELP IN DETERMINING YOUR HOUSING/MOUNTING PLATE NEEDS.